Diaphragm valve T4 *PVDF*
Code: 82

Technical data

Praher

DN 15 - DN 50

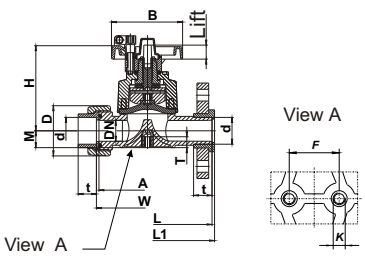

DN 65 - DN 80

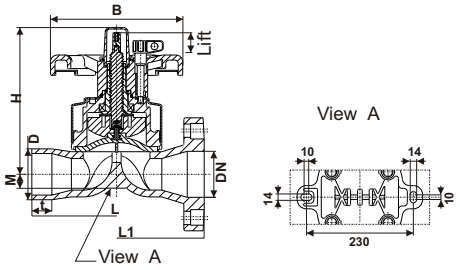

DN 15 - DN 50

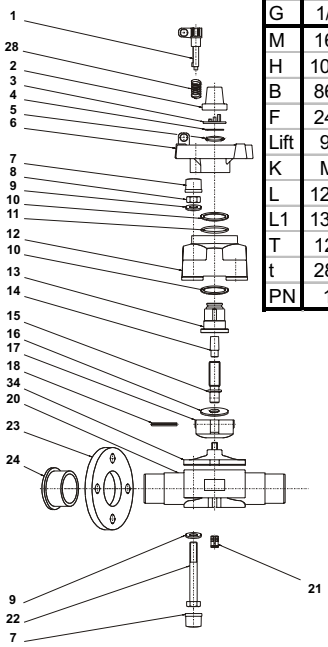

d	20	25	32	40	50	63	75	90	110	140
DN	15	20	25	32	40	50	65	80	100	125
G	1/2"	3/4"	1"	1 1/4"	1 1/2"	2"	2 1/2"	3"	4"	5"
M	16,5	16,5	20,1	31,5	31,5	38,6	25,0	25,0	25,0	255,0
H	100,0	100,0	107,0	144,0	144,0	170,0	260,0	260,0	330,0	330,0
B	86,0	86,0	86,0	136,0	136,0	136,0	234,0	234,0	234,0	234,0
F	24,5	24,5	24,5	43,5	43,5	43,5				
Lift	9,0	9,0	11,0	22,0	22,0	28,0	35,0	35,0	45,0	45,0
K	M6	M6	M6	M8	M8	M8				
L	124,0	144,0	154,0	174,0	194,0	224,0	284,0	300,0	340,0	
L1	130,0	150,0	160,0	180,0	200,0	230,0		310,0	350,0	400,0
T	12,0	12,0	12,0	15,0	15,0	15,0				
t	28,5	36,0	36,0	38,5	46,0	46,0	37,0	37,0	50,0	
PN	10	10	10	10	10	10	10,0	10,0	10,0	10,0

Dimensions in mm!

DN 65 - DN 80

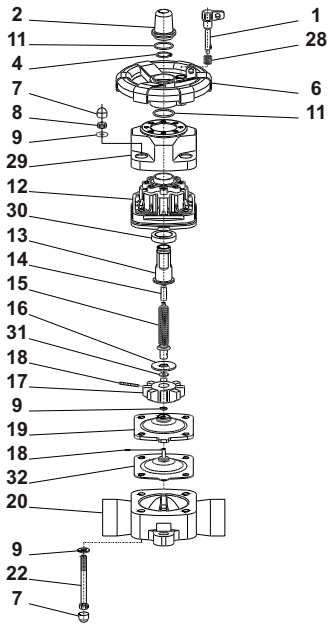

Parts: / **Material:**

01. Positioning bolt	POM
02. Sight glass	ABS
03. Indication disk	PP
04. Circlip	A 2
05. Shim	PTFE
06. Gear wheel	PP
07. Cover	PE
08. Hex nut	A 2
09. Shim	A 2
10. Disk	PTFE
11. O-Ring	EPDM
12. Bonnet	PP-GF
13. Screen socket	Ms
14. Positioning indicator	PS
15. Dowel pin	1.4305
16. Distance disk	1.4305
17. Compressor	PP-GF
18. Dowel pin	A 2
19. Diaphragm	EPDM
20. Bottom	PVDF
21. Insert nut	Ms
22. Hex nut	A 2
23. Flange	PP-St
24. Flange adaptor	PVDF
28. Spring	1.4401
29. Covering for Bonnet	PP
30. Axial deep groove ball bearing	A 2
31. Shim	A 2
32. Diaphragm	PTFE
34. Diaphragm	EPDM / PTFE

General:

- Sealing material: EPDM / FPM
- Body material: PVC-u - PP - ***PVDF***
- Dimensions: DN15/d20 - DN125/d140

Operating pressure:

DN 15 / 1/2" - DN 125 / 5" **10 bar**

Connections:

- PE, PP Fusion spigot
- Flange *(ANSI, ASA, DIN, JIS)*
  DN 65 with stub flange and backing ring
,

Technical specification:

For example:
TYPE PRAHER
PVDF Diaphragm valve T4 DN 15 d 20
PE fusion spigot
Sealing material EPDM
Max. Operating pressure 10 bar

Features:

- safety handle system
- corrosion resistant
- maintenance free operation over a long working life
- suitable for aggrssive and dirty media
- radial installation or removal
- easy replacement of the diaphragms

Safety handle system

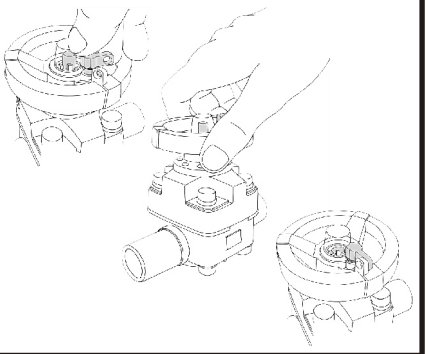

Subjects to technical modification!

Flow - Pressure loss diagram

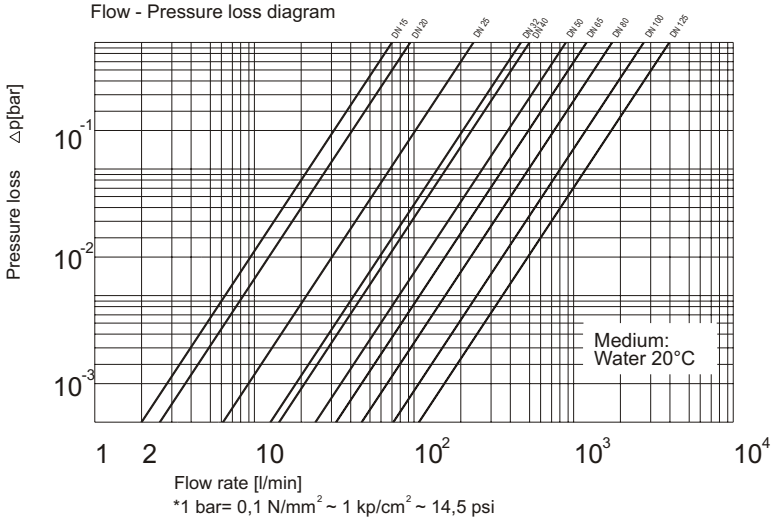

Pressure - Temperature diagram

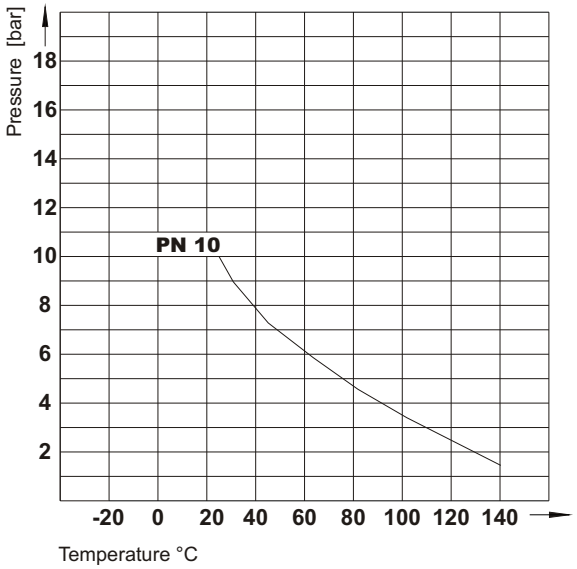

Starting torque of the gear wheel

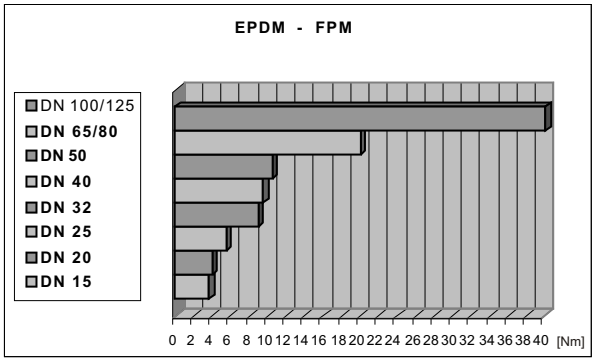

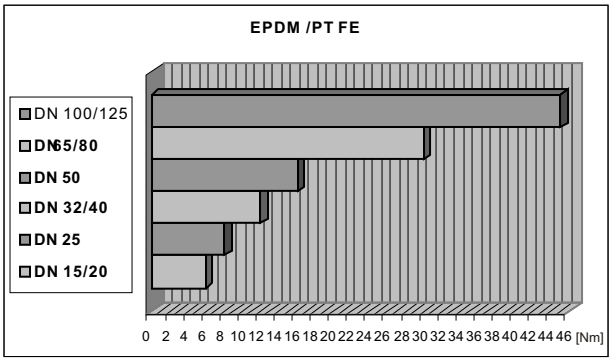

Starting torque of the screws

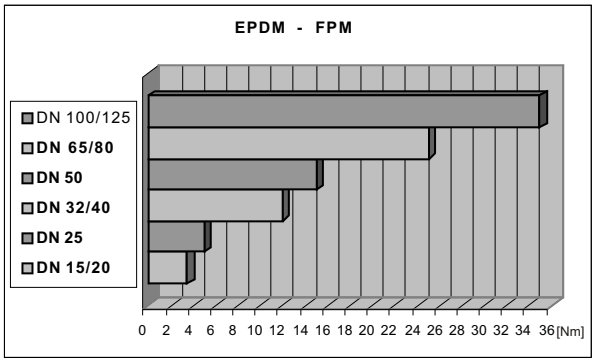

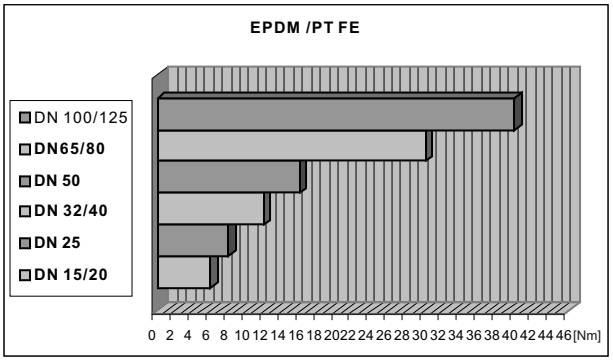

DN Dimensions for the bonnet!

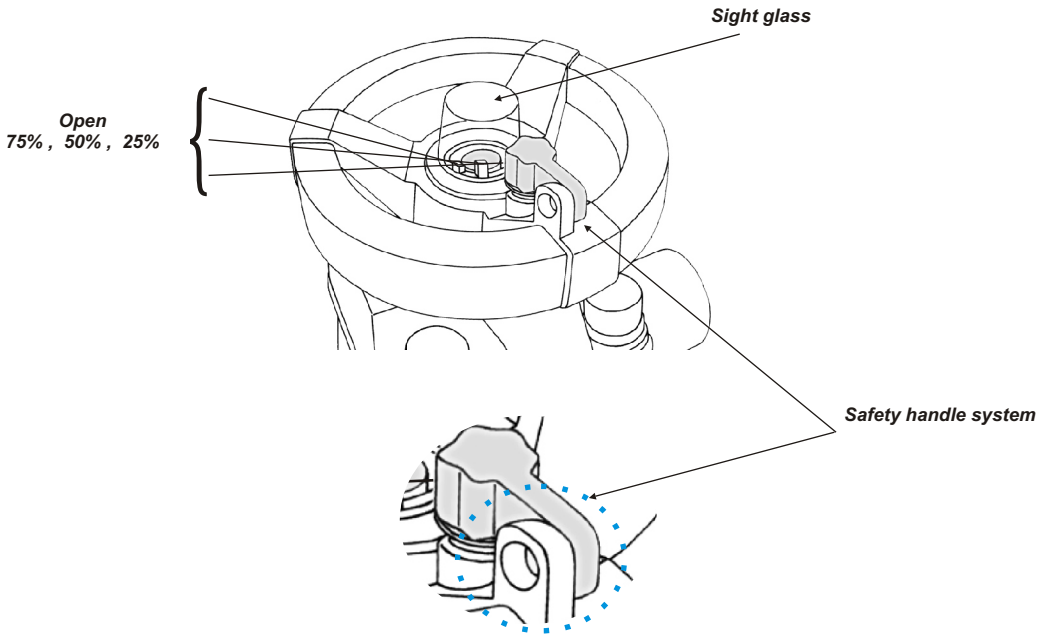

Notice:

10 / 00 © by Ludwig PRAHER, AUSTRIA